401002 | HINGE GLASS-WALL 90° MOUNTED INSIDE

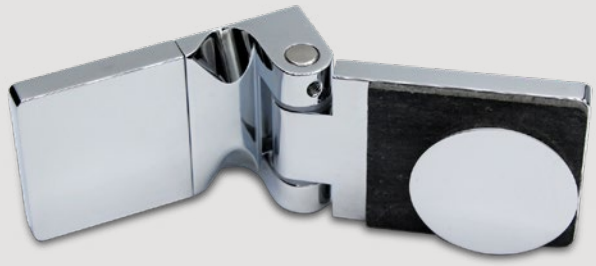

DESCRIPTION:

Hinge glass-wall 90° with wall fixing inside.
Door opening **outwards**. Flush glass fixing with concealed screw connection. Wall screw connection in slotted hole with cover.

| USAGE (WITHOUT GAP)

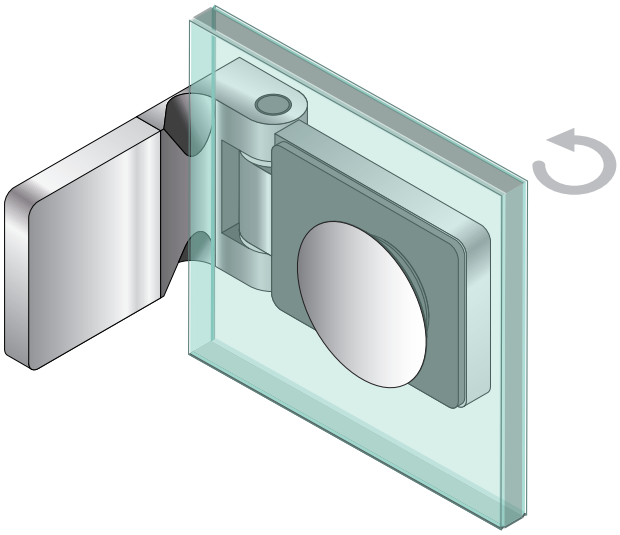

| GLASS PROCESSING

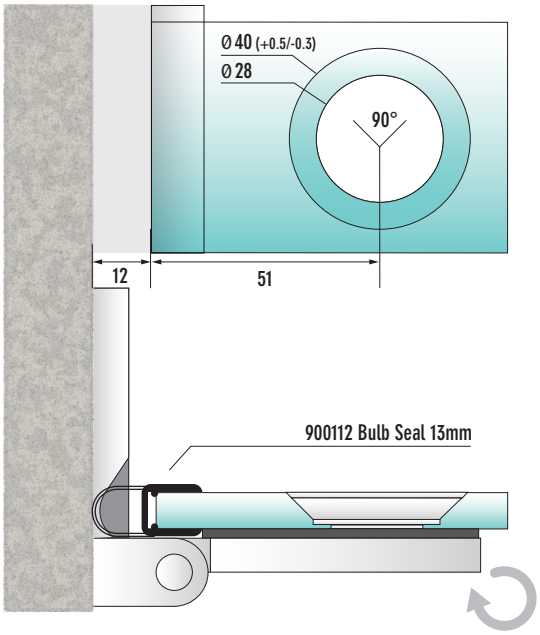

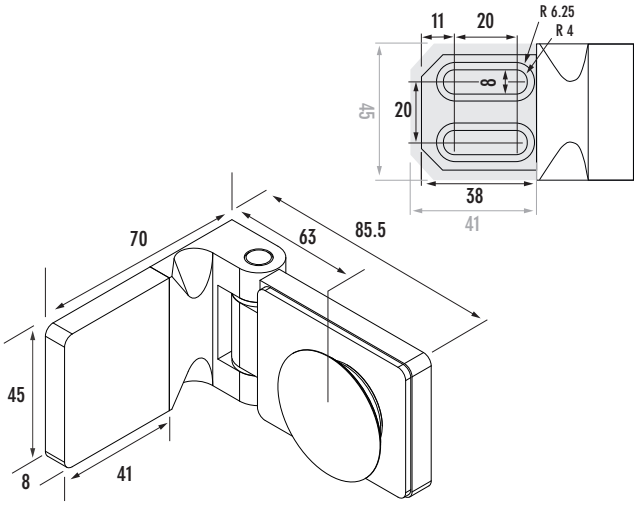

| TECHNICAL DATA:

Glasstype:	8 mm ESG
Maximum Weight:	50 kg using two hinges
Maximum Width:	1000 mm
Material:	Solid Brass
Usage:	left/right
Adjustability in the cone:	± 2.5 mm
Surface:	bright chrome-plated
Product-Code.:	401002

| SEAL RECOMMENDED:

Product-Code.:	900112
Description:	Bulb Seal 13mm